CL.1 Deck valve clockwise closing cold - Dark Chrome

20 005 705 Product version from 3/9/2015

- with WAVES structure
- hole diameter 32 mm
- rosette 60 x 47 mm
- with cold marking
- WRAS

Dark Chrome	20 005 705-19
Chrome	20 005 705-00
Brushed Platinum	20 005 705-06
Brushed Champagne (22kt Gold)	20 005 705-46
Champagne (22kt Gold)	20 005 705-47
Brushed Dark Platinum	20 005 705-99

We reserve the right to change designs, product range and technical specifications without prior notice.
More information can be found at: www.dornbracht.com +49 (0) 2371 8899 900 mail@dornbracht.com

CL.1 Deck valve clockwise closing cold - Dark Chrome

20 005 705 Product version from 3/9/2015

mm [inches]

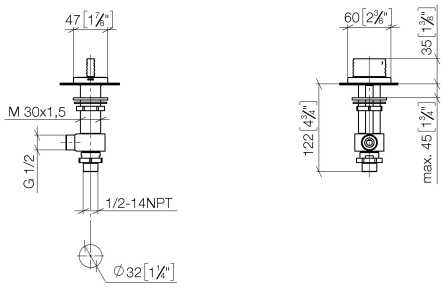

Flow rate chart

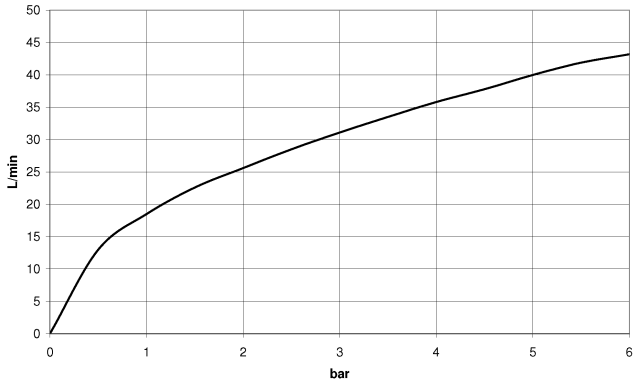

Codes & Standards

ADA	ASME A112.18.1/CSA B125.1	DIN 4109	ISO 3822
NSF/ANSI 372	NSF/ANSI/CAN 61	NSF372	NSF61
Scottish Water Byelaws	UK Water Supply Regulations	Ü-Zeichen	

CL.1 Deck valve clockwise closing cold - Dark Chrome

20 005 705 Product version from 3/9/2015

Certificates

IAPMO_N-4	LGA_28	IAPMO_6	WRAS_240202

We reserve the right to change designs, product range and technical specifications without prior notice.
More information can be found at: www.dornbracht.com +49 (0) 2371 8899 900 mail@dornbracht.com

CL.1 Deck valve clockwise closing cold - Dark Chrome

20 005 705 Product version from 3/9/2015

Parts for other
finishes can be found
here: Chrome

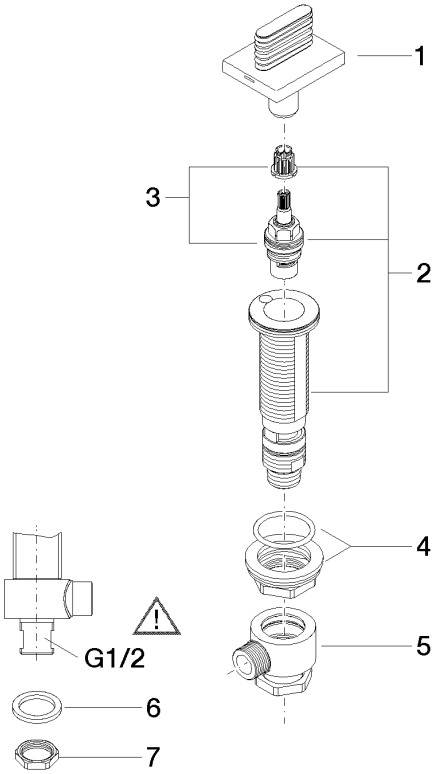

Spare parts list

No.	Item Number	Name	Quantity used	Delivery time
1	90 20 70 055 06-19	handle (cold)	1	20
2	04 17 11 058 53 90	side panel	1	2
3	90 90 03 153 00 90	top	1	2
4	04 23 10 032 78 90	fixing set	1	2
5	04 17 11 023 10 90	distributor	1	2
6	90 23 30 040 00-19	threaded connector	1	-
	Spare part can no longer be ordered, please order the replacement item			
7	09 30 11 059 90	disc	1	2
8	09 23 10 012 90	nut	1	2

We reserve the right to change designs, product range and technical specifications without prior notice.
More information can be found at: www.dornbracht.com +49 (0) 2371 8899 900 mail@dornbracht.com